SAFETY PRECAUTIONS

SERVICE WARNING

Only qualified service technicians who are familiar with safety checks and guidelines should perform service work. Before replacing parts, disconnect power source to protect electrostatically sensitive parts. Do not attempt to modify any circuit unless so recommended by the manufacturer. When servicing the receiver, use an isolation transformer between the line cord and power receptacle.

SERVICING THE HIGH VOLTAGE AND CRT

Use EXTREME CAUTION when servicing the high voltage circuits. To discharge static high voltage, connect a 10K ohms resistor in series with a test lead between the receiver ground and CRT anode lead. DO NOT lift the CRT by the neck. Always wear shatterproof goggles when handling the CRT to protect eyes in case of implosion.

X-RAY RADIATION AND HIGH VOLTAGE LIMITS

Be aware of the instructions and procedures covering X-ray radiation. In solid-state receivers and monitors, the CRT is the only potential source of X-rays. Keep an accurate high voltage meter available at all times. Check meter calibration periodically. Whenever servicing a receiver, check the high voltage at various brightness levels to be sure it is regulating properly. Keep high voltage at rated value, NO HIGHER. Excessive high voltage may cause X-ray radiation or failure of associated components. DO NOT depend on protection circuits to keep voltage at rated value. When troubleshooting a receiver with excessive high voltage, avoid close contact with the CRT. DO NOT operate the receiver longer than necessary. To locate the cause of excessive high voltage, use a variable AC transformer to regulate voltage. In present receivers, many electrical and mechanical components have safety related characteristics which are not detectable by visual inspection. Such components are identified by a # on both the schematic and the parts list. For SAFETY, use only equivalent replacement parts when replacing these components.

GENERAL GUIDELINES

Perform a final SAFETY CHECK before returning receiver to customer. Check repaired area for poorly soldered connections, and check entire circuit board for solder splashes. Check board wiring for pinched wires or wires contacting any high wattage resistors. Check that all control knobs, shields, covers, grounds, and mounting hardware have been replaced. Be sure to replace all insulators and restore proper lead dress.

SAFETY CHECKS — FIRE AND SHOCK HAZARD

Cold Leakage Checks for Receivers with Isolated Ground

Unplug the AC cord, connect a jumper across the plug prongs, and turn the power switch on (if applicable). Use an ohmmeter to measure the resistance between the jumped AC plug and any exposed metal cabinet parts such as antenna screw heads, control shafts, or handle brackets. Exposed metal parts with a return path should measure between 1M ohms and 5.2M ohms. Parts without a return path must measure infinity.

Hot Leakage Current Check

Plug the AC cord directly into an AC outlet. DO NOT use an isolation transformer. Use a 1500 ohms, 10W resistor in parallel with a $.15\mu F$ capacitor to connect between any exposed metal parts on the receiver and a good earth ground. (See figure below.) Use an AC voltmeter with at least 5000 ohms per volt sensitivity to measure the voltage across the resistor. Check all exposed metal parts and measure voltage at each point. Voltage measurements should not exceed .75VAC, $500\mu A$. Any value exceeding this limit constitutes a potential shock hazard and must be corrected. If the AC plug is not polarized, reverse the AC plug and repeat exposed metal part voltage measurement at each point.

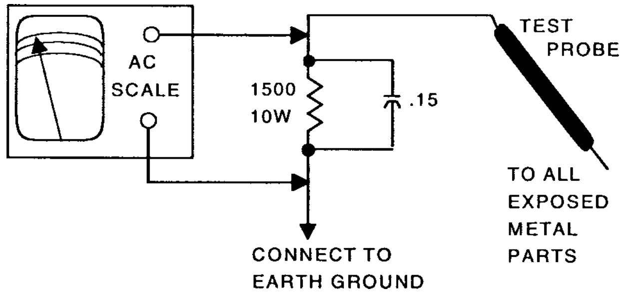

HIGH VOLTAGE SHUTDOWN TEST

Momentarily short BC14901 (see Q14901 base) to ground. The receiver should lose raster and sound. If receiver does not lose raster and sound, the shutdown circuit should be repaired. To resume normal operation, remove AC power for approximately 30 seconds and then turn the receiver on.

The listing of any available replacement part herein in no case constitutes a recommendation, warranty, or guarantee by SAMS Technical Publishing as to the quality and suitability of such replacement part. The numbers of the listed parts have been compiled from information furnished to SAMS Technical Publishing by the manufacturers of the specific type of replacement part listed.

Reproduction or use, without express permission, of editorial or pictorial content, in any manner, is prohibited. No patent liability is assumed with respect to the use of the information contained herein.

© 2003 SAMS Technical Publishing LLC

9850 East 30th Street
Indianapolis, IN 46229

Printed in the United States of America 5 4 3 2 1

03PF02123

UPC
HERE

PHOTOFACT® *Technical Service Data*

INDEX

Error Codes Chart 1
GridTrace Location
  Main Board 4
High Voltage Shutdown Test 1
IC Functions 2
Important Parts Information 4
Miscellaneous Adjustments 1
Parts List 4
Placement Chart 1
Safety Precautions 1
Schematic Component Location 3
Schematic Notes 2
Schematics
  Audio 3
  Comb Filter 3
  Gemstar 4 3
  Power Supply 2
  Television 2
Test Equipment 1
Tuner Information 1

For Supplier Address,
See PHOTOFACT Annual Index

RCA

Model G27648YX1 (Chassis CTC203AA)

Representative Model

Essential coverage for servicing a television receiver...

- **Schematics**
- **Component locations**
- **Parts list**

Coverage includes these additional models and chassis:

Models	Chassis
G27648YX51	CTC203AA5
G27648YX51	CTC203AA9
G27648YX52	CTC203AA5
G27648YX52	CTC203AA9

SAMS Technical Publishing LLC

JUNE 2003 SET 4733

4733

TUNER INFORMATION

TUNER VOLTAGE CHART

Pin	VHF Low Band	VHF High Band	UHF Band
(1) AGC	2.5V	2.5V	3.0V
(2) NC	1.3V	4.3V	5.7V
(3) +5V	5.2V	5.2V	5.2V
(4) CLOCK	5.1V	5.1V	5.1V
(5) DATA	5.1V	5.1V	5.1V
(6) +5V	5.2V	5.2V	5.2V
(7) +5V	5.2V	5.2V	5.2V
(9) +32V	34.5V	34.5V	34.5V
(11) IF	0V	0V	0V

NOTE: VHF Low Band voltages taken on channel 2.
VHF High Band voltages taken on channel 7.
UHF Band voltages taken on channel 14.

TUNER TERMINAL GUIDE

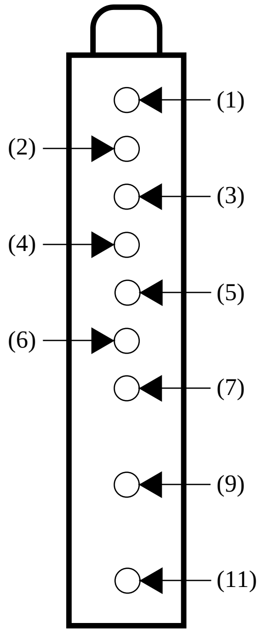

MISCELLANEOUS ADJUSTMENTS

NOTE: All procedures require an antenna connected and power applied to the set.

HIGH VOLTAGE CHECK

Tune in a picture. Set brightness, contrast, and color to minium. Connect a high voltage probe to the CRT anode. High voltage should measure between 26kV and 28kV.

COLOR TEMPERATURE

NOTE: See Service Adjustment Parameters to change drive and bias values.

Press menu button for collapsed raster service line. Disconnect the antenna. Preset the red, green, and blue drive values to 32. Adjust screen control for a service line that is just visible. Adjust red, green, and blue drives to obtain a white raster. Check the low light to high light gray scale tracking. Repeat the procedure, if necessary, to obtain the best performance.

SERVICE MENU

The following adjustment procedures are accessed thru a service menu. To access the service menu, turn the receiver on, press the menu button and hold it down while pressing the power button. While holding down the menu button, release the power button and press the volume + button. The screen will display a one line menu, on the left the parameter P0, and on the right the value of that parameter V0. Release buttons. Adjustments are made by selecting the proper parameter and changing the value of that parameter. To change the parameter number use channel up and down buttons. To adjust the current value of that parameter use volume + and - buttons. To access and change any of the adjustments, the proper parameter pass number must be entered. This information is listed at the beginning of the alignment. When these parameters are modified, the T-Chip and the corresponding EEPROM are updated. All service adjustments are bus controlled, except focus and screen.

NOTE: In order to adjust the RF AGC, audio or video levels, tuner, PIP, or stereo circuits, the ChipperCheck hardware and software must be used. This can be purchased from Thomson Electronics. Before making any changes to any of the values, record the On Set values.

SERVICE ADJUSTMENT PARAMETERS

Parameter No.	Parameter Name	On Set Value	Value Range	Comment
0	Pass number for service adjustment parameters.	Must set to 76	-	May not advance until value is set to 76.
1	Error Code 1	0	0 - 255	Displays the first error detected. Set to 0 before exiting. See Error Codes Chart.
2	Error Code 2	0	0 - 255	Displays the second error detected. Set to 0 before exiting. See Error Codes Chart.
3	Error Code 3	0	0 - 255	Displays the last error detected. Set to 0 before exiting. See Error Codes Chart.
4	Horizontal Phase	10	0 - 15	Tune in a crosshatch pattern, adjust to center the pattern on the screen.
5	EW DC (Width)	16	0 - 31	Tune in a crosshatch pattern, adjust for slight horizontal overscan.
6	EW Amplitude	8	0 - 15	Set value to 8.
7	EW Tilt	8	0 - 15	Set value to 8.
8	Top Corner Pin Correction	2	0 - 7	Set value to 2.
9	Bottom Corner Pin Correction	2	0 - 7	Set value to 2.
10	Vertical DC	33	0 - 63	Tune in a crosshatch pattern, adjust to center vertically.
11	Vertical Size	84	0 - 127	Tune in a crosshatch pattern, adjust for slight vertical overscan.
12	Vertical Countdown Mode	0	0 - 3	Set value to 0. (0 = Standard, 1 = Non-Standard, 2 = 50Hz, 3 = 48Hz)
13	Red Bias	30	0 - 127	Press menu button on the TV set for setup line.
14	Green Bias	15	0 - 127	Press menu button on the TV set for setup line.
15	Blue Bias	34	0 - 127	Press menu button on the TV set for setup line.
16	Red Drive	41	0 - 63	-
17	Green Drive	33	0 - 63	-
18	Blue Drive	32	0 - 63	-
19	Gemstar Horizontal OSD Position	166	0 - 255	Set value to 166.
20	Gemstar Vertical OSD Position	68	0 - 255	Set value to 68.
21	Gemstar PIP Horizontal Position	40	0 - 255	Set value to 40.
22	Gemstar PIP Vertical Position	43	0 - 255	Set value to 43.
23	Gemstar PIP Window Vertical Size	3	0 - 13	Set value to 3.

ERROR CODES CHART

Error Code DEC	HEX	Error Location	Condition Indicated
0	00	No error code	-
1	01	16.0V fault	16.0V STBY source is failing.
3	03	12.0V run fault	12.0V source is failing.
4	04	T4 Chip	Run supply failed.
8	08	T4 Chip	X-ray protection caused high voltage shutdown.
9	09	T4 Chip (POR)	Power supply problem at (POR) power on reset.
10	0A	F2 PIP module error (POR)	Power supply problem at (POR) power on reset/PIP.
11	0B	Stereo decoder (POR)	Power supply problem at reset/Stereo decoder.
16	10	Run IIC Bus held low	Run IIC clock or data held low.
18	12	Standby IIC Bus held low	Standby IIC clock or data held low.
23	17	Gemstar 4 Board	Guide fatal error on set using Gemstar 4 Board.
24	18	Gemstar 4 Board	Watchdog error on set using Gemstar 4 Board.
25	19	Gemstar 4 Board	Task monitor error on set using Gemstar 4 Board.
26	1A	Gemstar 4 Board	Task monitor error on set using Gemstar 4 Board.
32	20	Gemstar 4 Board	CPU error on set using Gemstar 4 Board.
34	22	Gemstar 4 Board	Gemstar fails to acknowledge.
44	2C	F2 PIP module error	F2PIP fails to acknowledge.
102	66	Octal DAC	Octal DAC fails to acknowledge.
128	80	Stereo decoder	Stereo decoder fails to acknowledge.
160	A0	Main or PIP tuner EEPROM	Main or PIP tuner EEPROM fails to acknowledge.
186	BA	T4 Chip	T4 Chip fails to acknowledge.
196	C4	Main tuner PLL/DAC	Main tuner PLL IC fails to acknowledge.
198	C6	Main tuner PLL/DAC	Main tuner DAC IC fails to acknowledge.

ERROR CODES

If certain failures occur, the matching error codes will be stored in the EEPROM. These error codes will be displayed in parameters 1, 2, and 3. The first failure error code will be stored at parameter 1 and the second failure error code will be stored at parameter 2. Parameter 3 will be updated to display the most recent failure occurred in the chassis. If a failure of a bus IC occurred, the normal acknowledgment checking of that bus will be disabled in the service mode and the address of that IC which failed will be stored in one of the error code parameters. After every repair is done to the chassis it is recommended to check the error code parameters, and reset them back to value 0.

TEST EQUIPMENT

Test equipment listed by participating manufacturer illustrates typical or equivalent equipment used by Sams engineers to obtain measurements. This equipment is compatible with most types used by field service technicians.

Equipment	Sencore No.
Oscilloscope	SC3100
Generators	
RGB	CM2125
Multiburst Signal	VG91
Color Bar	VG91
TV Stereo	VG91
Digital VOM	SC3100
Frequency Meter	SC3100
Hi-Voltage Probe	HP200
Accessory Probes	TP212
Isolation Transformer	PR570
Capacitance Analyzer	LC102
CRT Analyzer	CR7000
AC Leakage Tester	PR570
Inductance Analyzer	LC102
Flyback Yoke Tester	TVA92
Field Strength Meter	SL753
Transistor Tester	TF46
Horizontal Analyzer	HA-2500
Video Analyzer	VG91, TVA92

PLACEMENT CHART

CRT BOARD

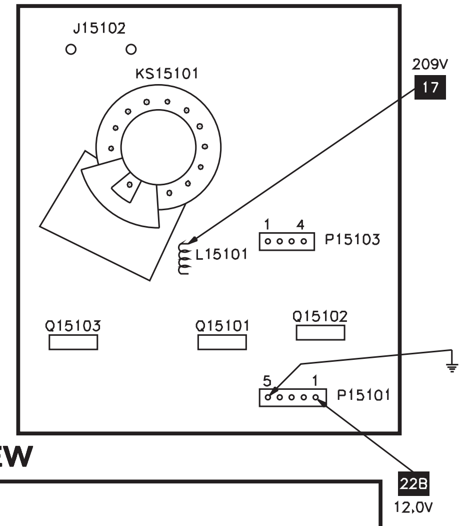

MAIN BOARD - TOP VIEW

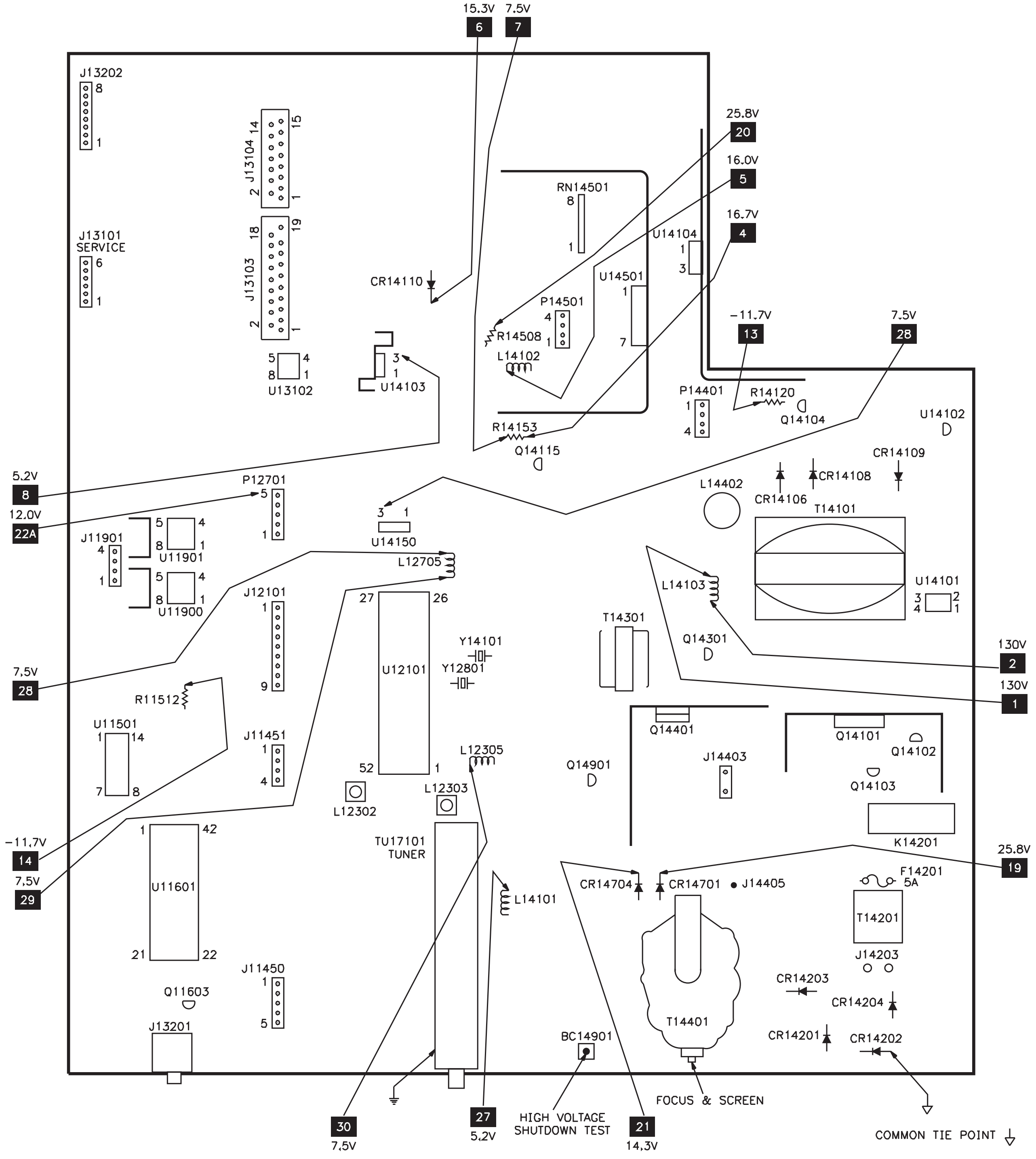

MAIN BOARD - BOTTOM VIEW

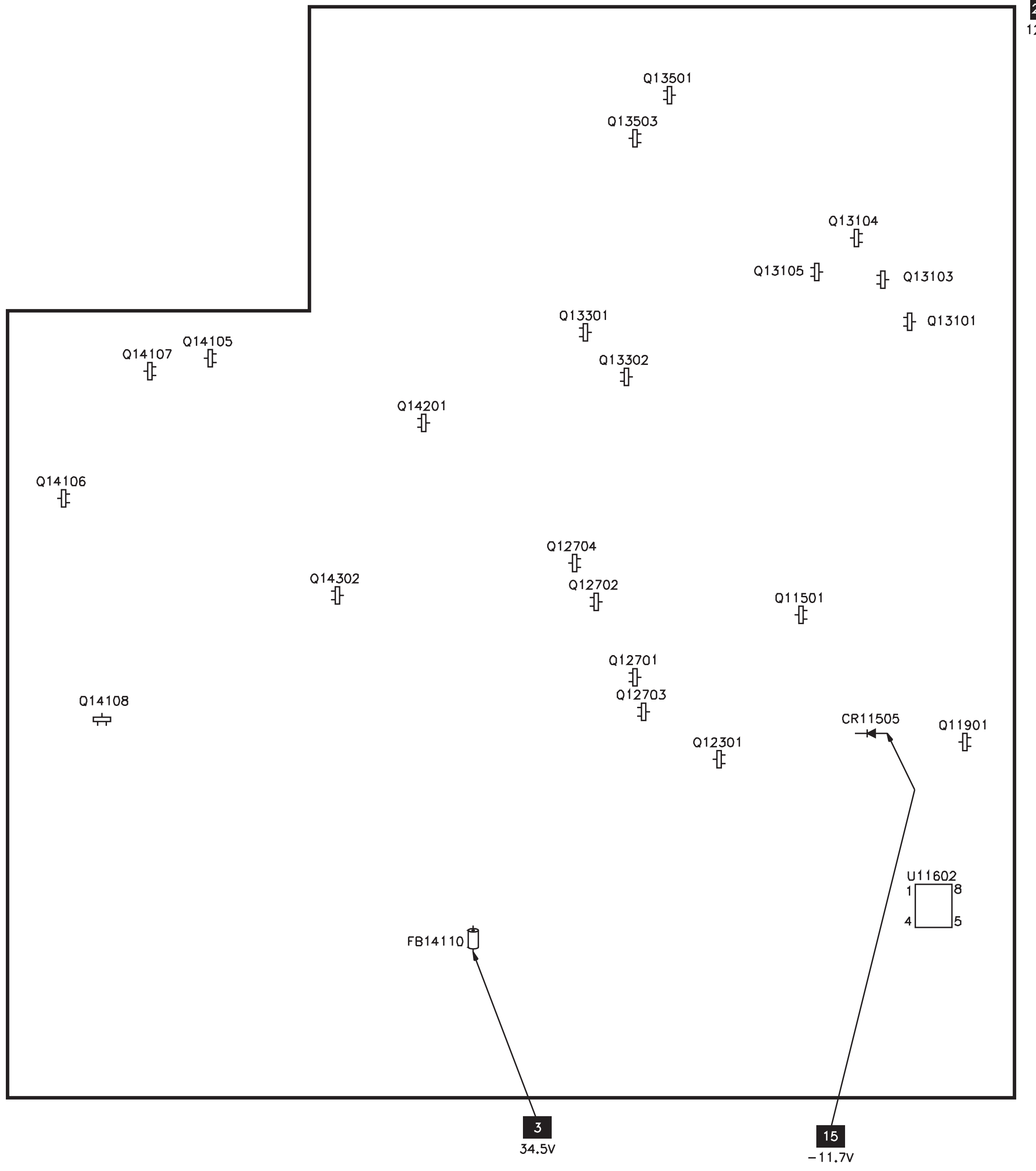

COMB FILTER BOARD

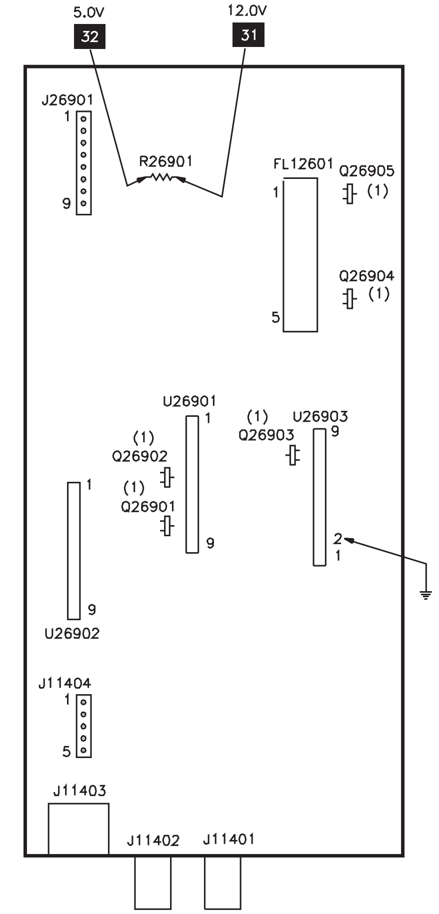

(1) LOCATED ON BOTTOM OF BOARD

RCA

MODEL G27648YX1 (CHASSIS CTC203A)

A B

TELEVISION SCHEMATIC

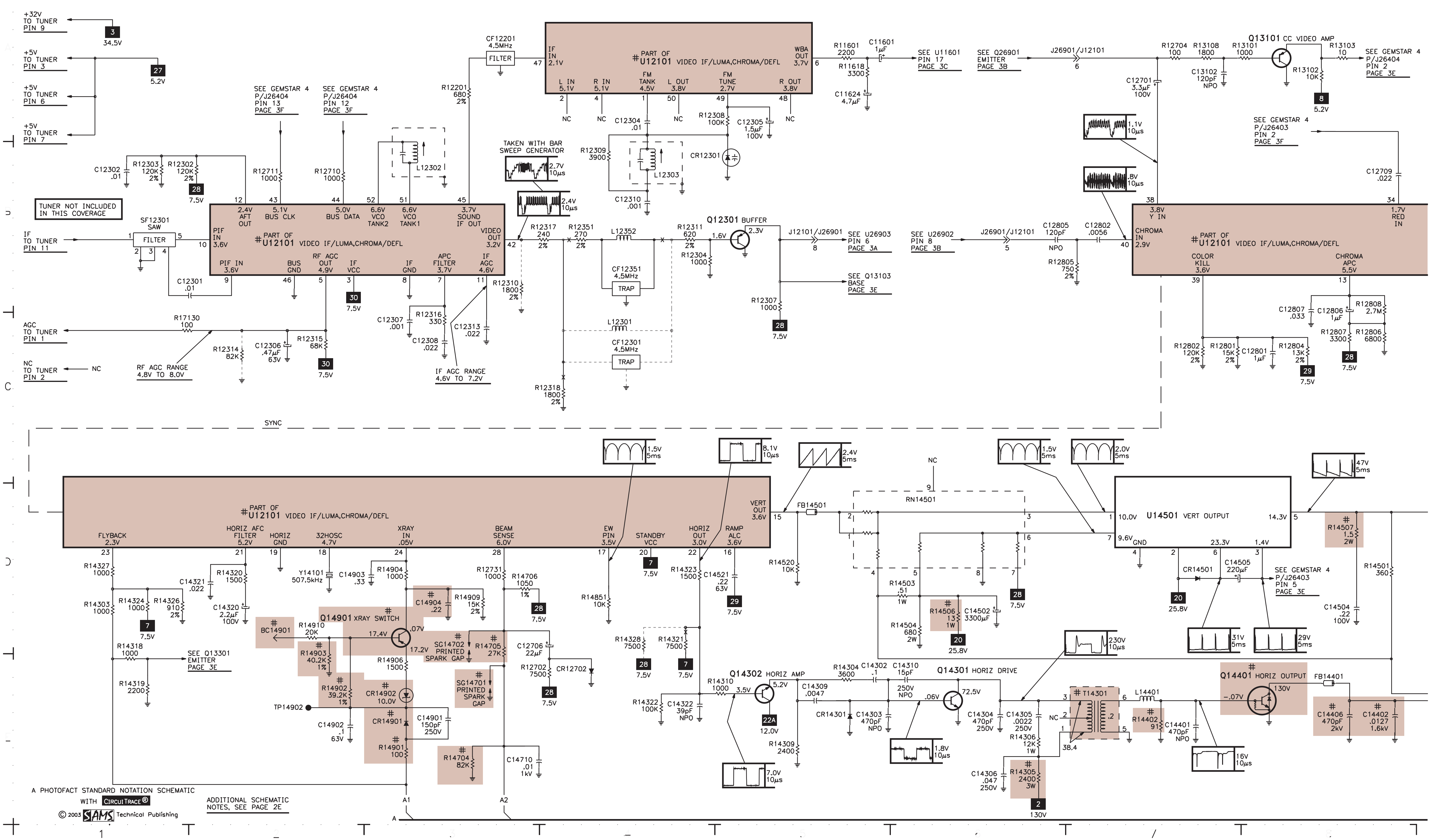

A PHOTOFACT STANDARD NOTATION SCHEMATIC WITH CircuiTrace®

© 2003 SAMS Technical Publishing

ADDITIONAL SCHEMATIC NOTES, SEE PAGE 2E

TELEVISION SCHEMATIC continued

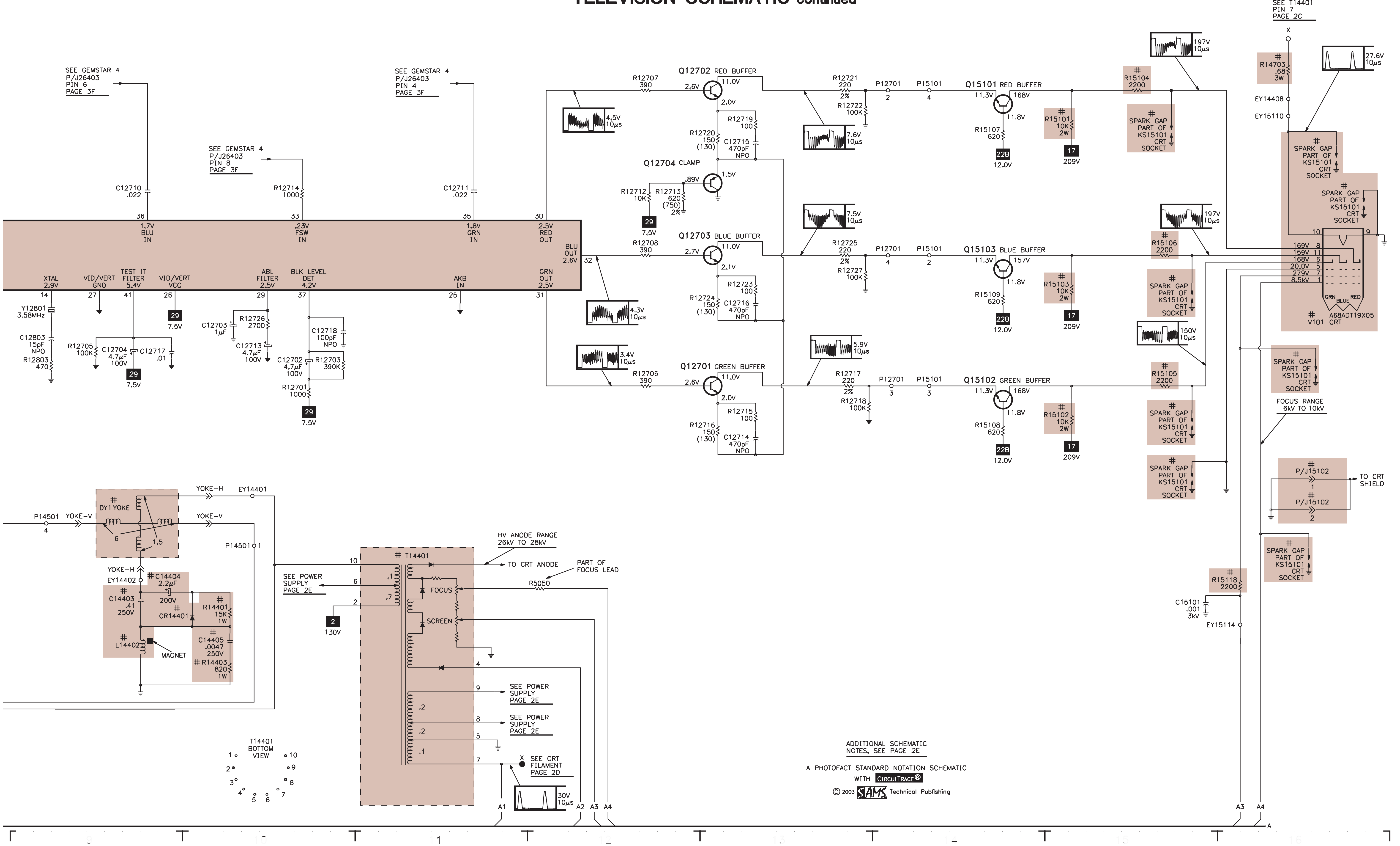

ADDITIONAL SCHEMATIC NOTES, SEE PAGE 2E

A PHOTOFACT STANDARD NOTATION SCHEMATIC WITH CircuiTrace®

© 2003 SAMS Technical Publishing

POWER SUPPLY SCHEMATIC

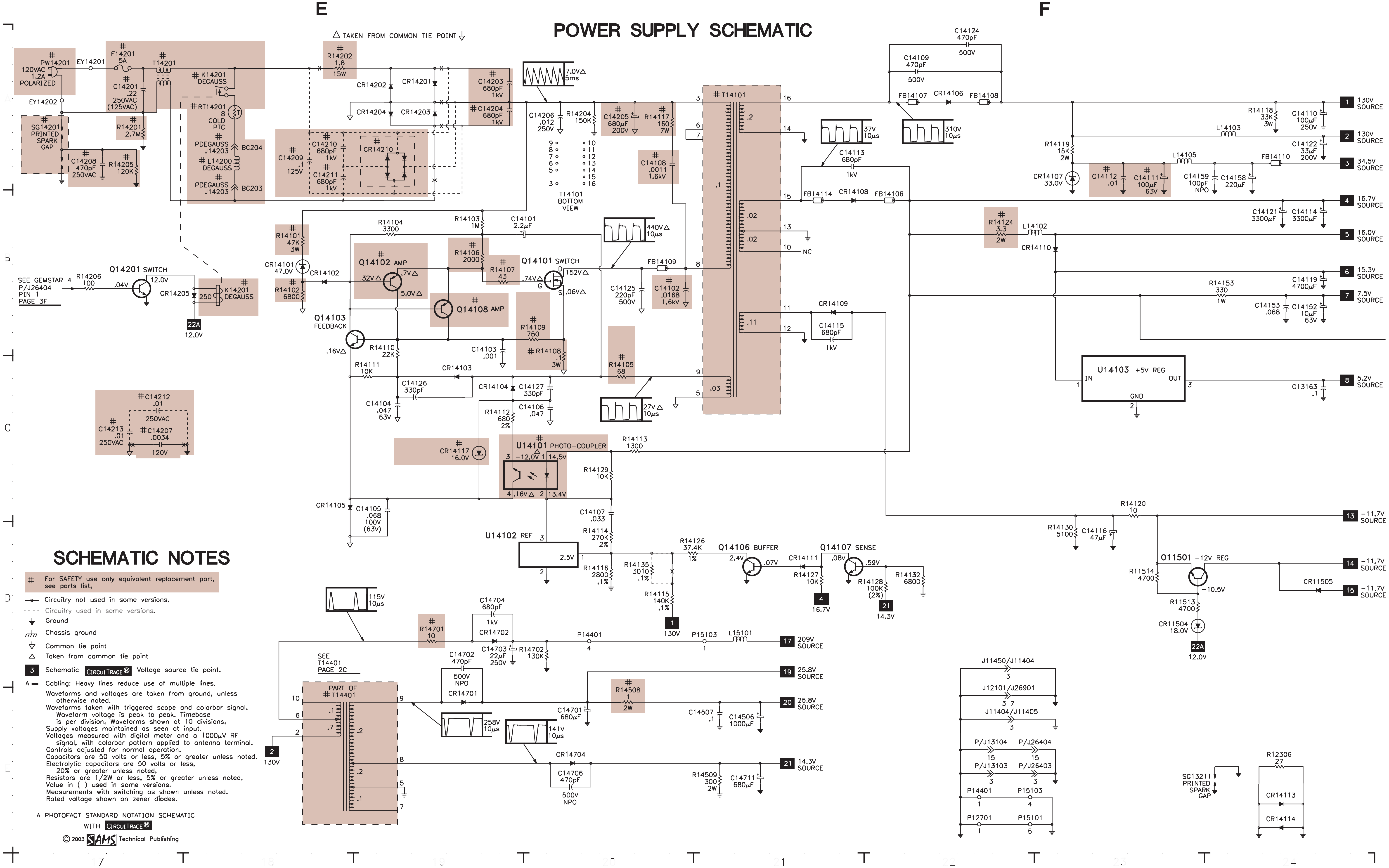

SCHEMATIC NOTES

\# For SAFETY use only equivalent replacement part, see parts list.

- Circuitry not used in some versions.
- Circuitry used in some versions.
- Ground
- Chassis ground
- Common tie point
- Taken from common tie point
- 3 Schematic CIRCUITRACE® Voltage source tie point.
- A — Cabling: Heavy lines reduce use of multiple lines.

Waveforms and voltages are taken from ground, unless otherwise noted.
Waveforms taken with triggered scope and colorbar signal. Waveform voltage is peak to peak. Timebase is per division. Waveforms shown at 10 divisions.
Supply voltages maintained as seen at input.
Voltages measured with digital meter and a 1000µV RF signal, with colorbar pattern applied to antenna terminal.
Controls adjusted for normal operation.
Capacitors are 50 volts or less, 5% or greater unless noted.
Electrolytic capacitors are 50 volts or less, 20% or greater unless noted.
Resistors are 1/2W or less, 5% or greater unless noted.
Value in ( ) used in some versions.
Measurements with switching as shown unless noted.
Rated voltage shown on zener diodes.

A PHOTOFACT STANDARD NOTATION SCHEMATIC WITH CIRCUITRACE®

© 2003 SAMS Technical Publishing

G
POWER SUPPLY SCHEMATIC continued

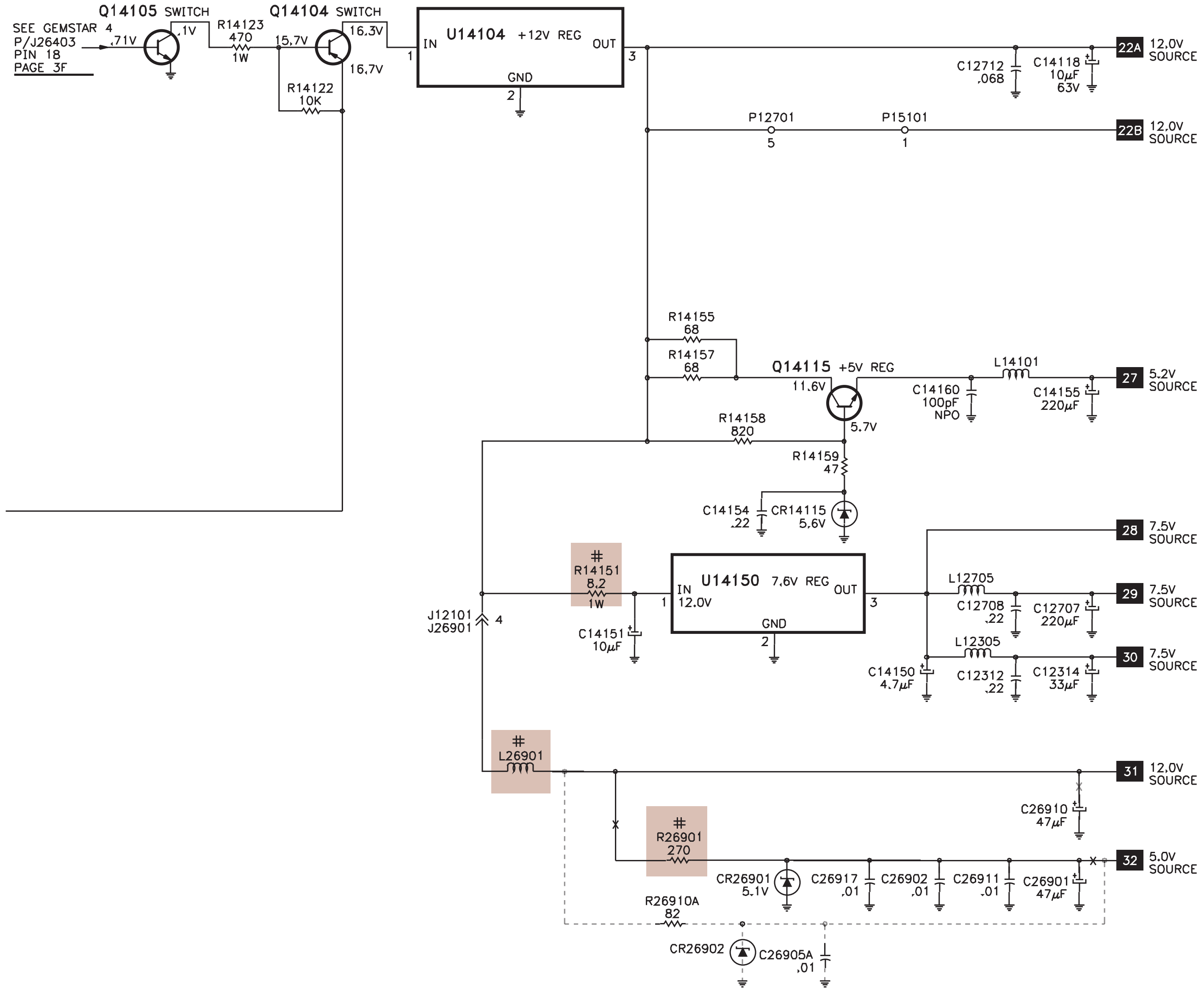

ADDITIONAL SCHEMATIC NOTES, SEE PAGE 2E

A PHOTOFACT STANDARD NOTATION SCHEMATIC WITH CircuiTrace®

© 2003 SAMS Technical Publishing

IC FUNCTIONS

U11601
CXA2074S

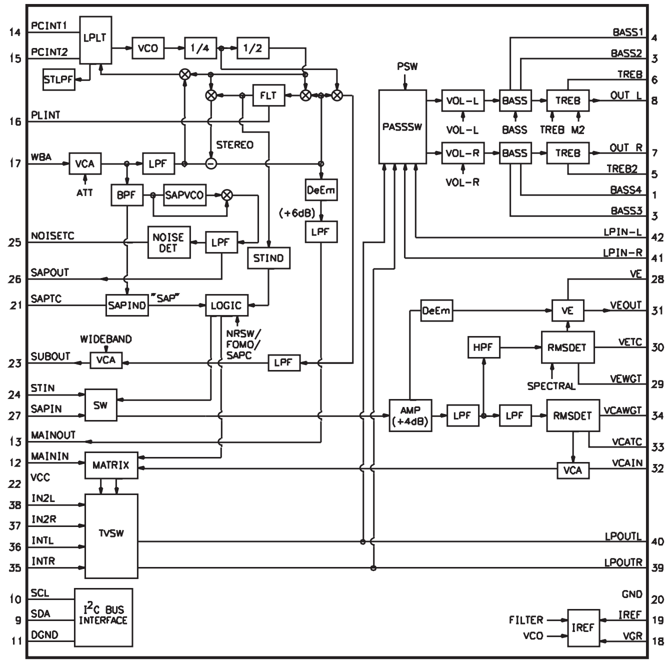

U12101
LA7612N

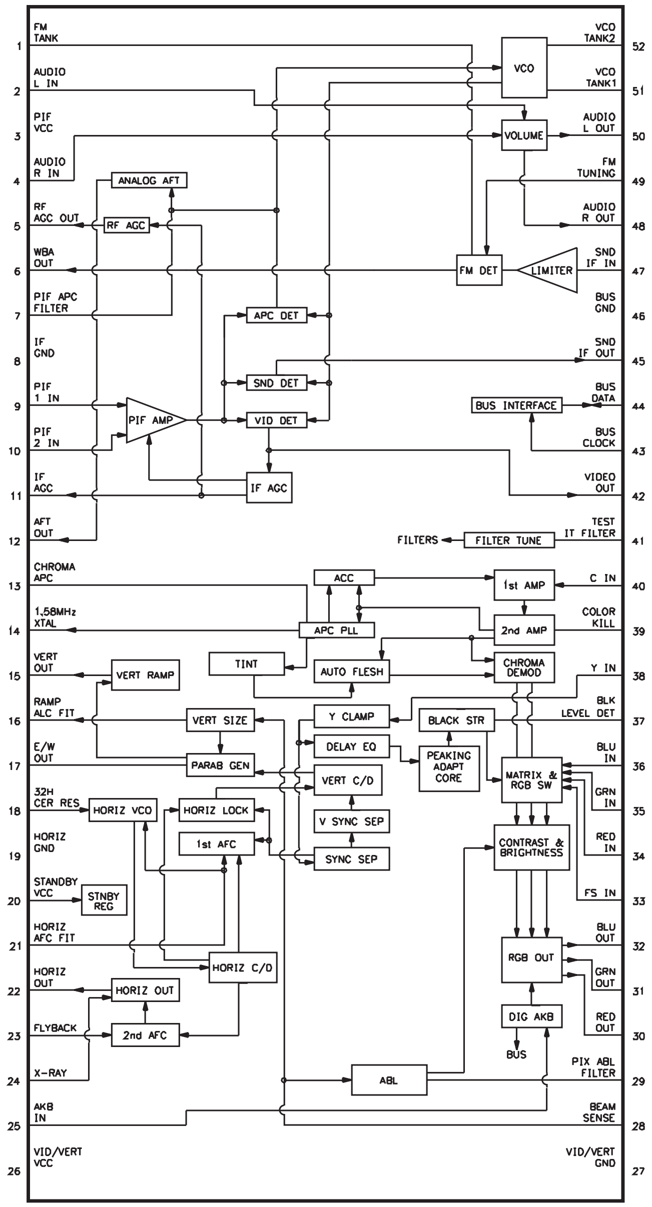

U11900, U11901
TDA7267

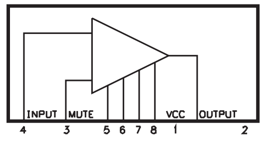

RCA

MODEL G27648YX1 (CHASSIS CTC203AA)

A B

COMB FILTER SCHEMATIC

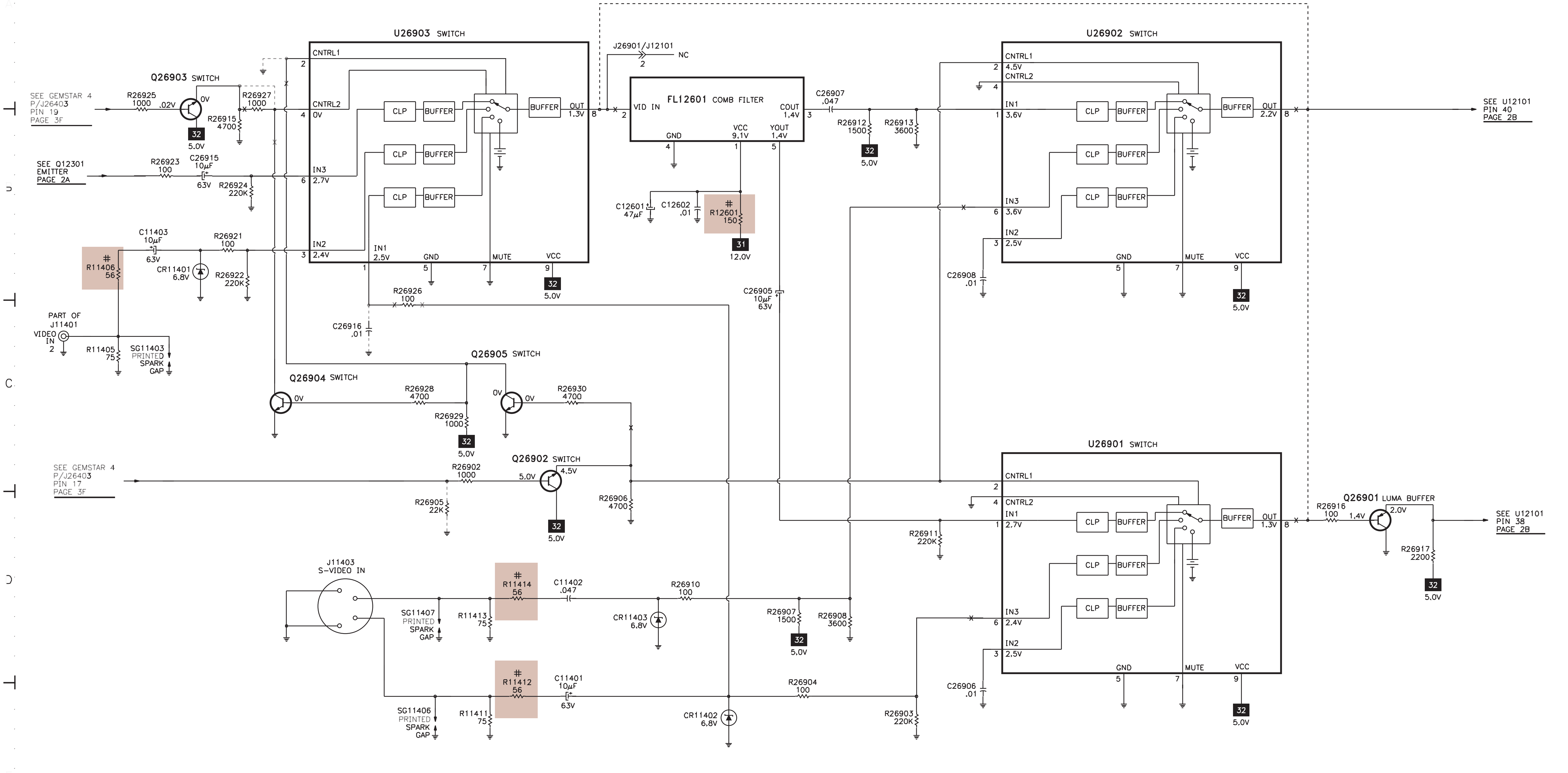

ADDITIONAL SCHEMATIC NOTES, SEE PAGE 2E

A PHOTOFACT STANDARD NOTATION SCHEMATIC WITH CircuiTrace®
© 2003 SAMS Technical Publishing

AUDIO SCHEMATIC

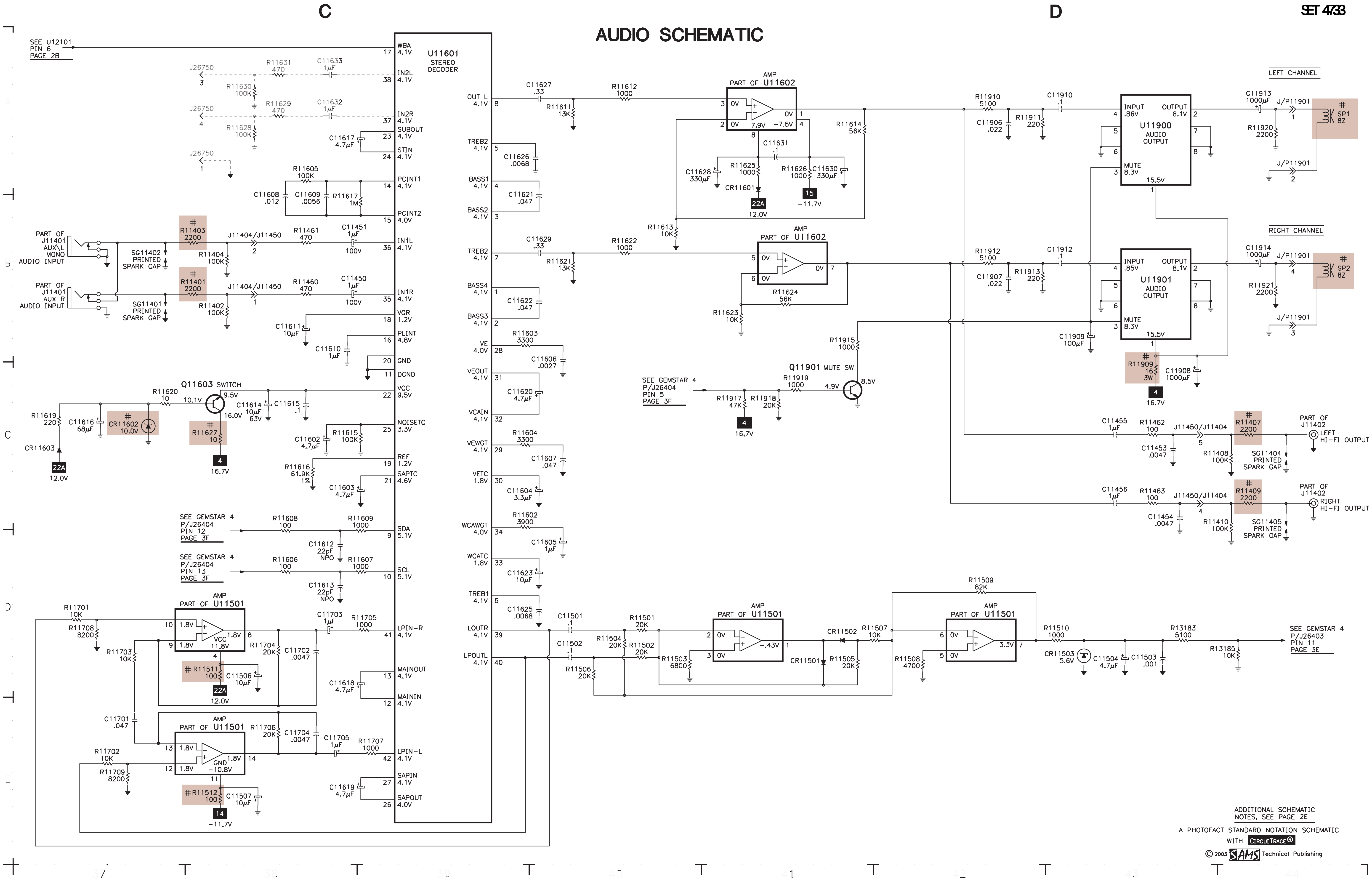

ADDITIONAL SCHEMATIC NOTES, SEE PAGE 2E

A PHOTOFACT STANDARD NOTATION SCHEMATIC WITH CIRCUITTRACE®

© 2003 SAMS Technical Publishing

E F

GEMSTAR 4 SCHEMATIC

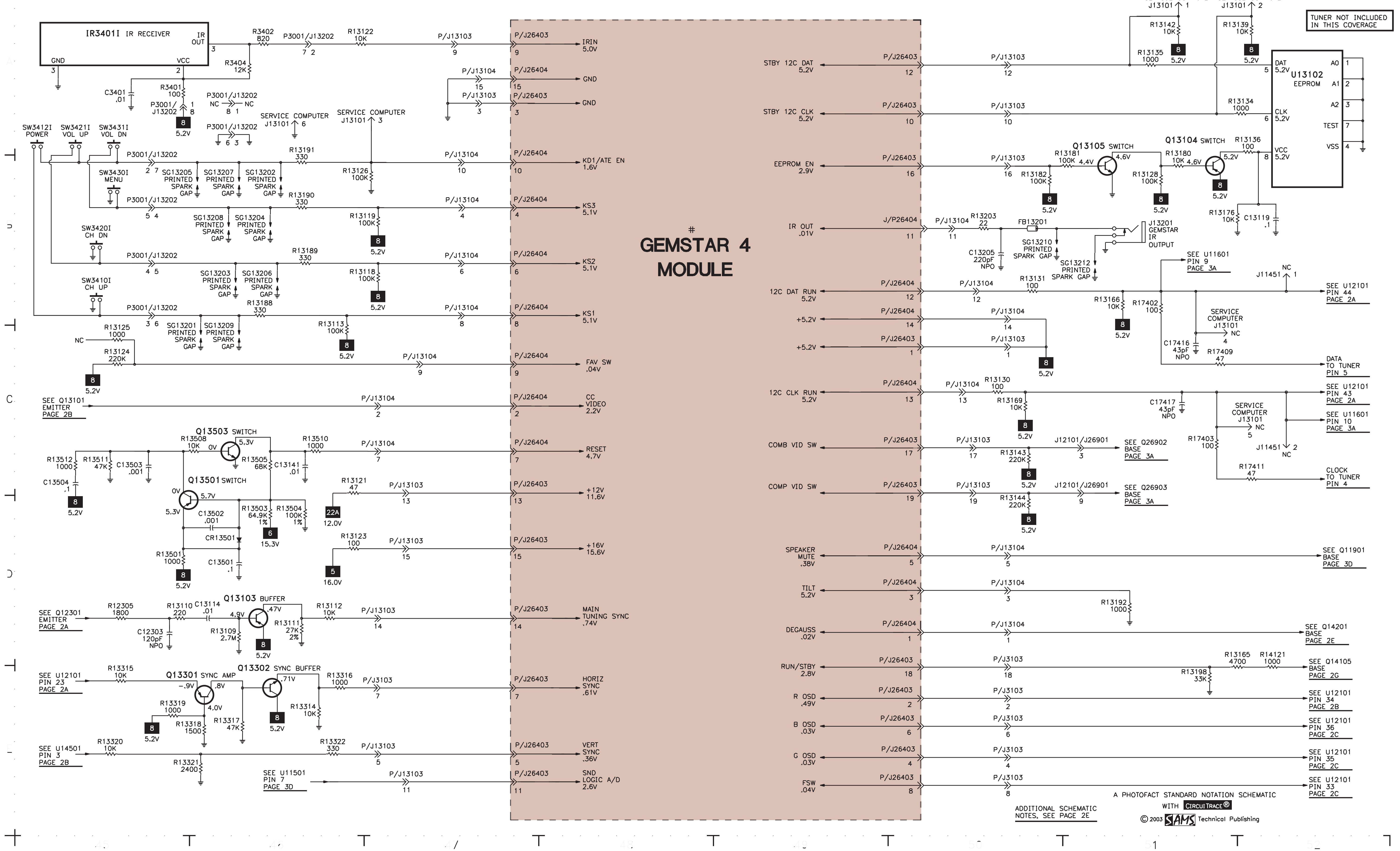

A PHOTOFACT STANDARD NOTATION SCHEMATIC WITH CIRCUITRACE®

ADDITIONAL SCHEMATIC NOTES, SEE PAGE 2E

© 2003 SAMS Technical Publishing

SCHEMATIC COMPONENT LOCATION GUIDE

C3401	A45	C12304	A4	C14125	B20	C26906	E33	FB14401	E8	Q26904	C30	R11629	A38	R12726	C10	R13504	D46	R14402	E7	RN14501	D5
C11401	E31	C12305	A5	C14126	C19	C26907	B33	FB14501	D5	Q26905	C31	R11630	A38	R12727	B13	R13505	C46	R14403	E10	RT14201	A18
C11402	D31	C12306	C2	C14127	C20	C26908	B33	FL12601	B32	R3401	A45	R11631	A38	R12731	D3	R13508	C45	R14501	D8	SF12301	B1
C11403	B29	C12307	C3	C14150	C27	C26910	C28	IR3401I	A45	R3402	A46	R11701	D37	R12801	C7	R13510	C46	R14503	D5	SP1	A44
C11450	B38	C12308	C3	C14151	C26	C26911	D28	J11401	B37	R3404	A46	R11702	E37	R12802	C7	R13511	C45	R14504	D6	SP2	B44
C11451	B38	C12310	B4	C14152	B24	C26915	B29	J11401	B37	R5050	D12	R11703	D37	R12803	C9	R13512	C45	R14506	D6	SW3410I	B45
C11453	C43	C12312	C28	C14153	B24	C26916	C30	J11401	C29	R11401	B37	R11704	D38	R12804	C8	R14101	B18	R14507	D8	SW3412I	B45
C11454	C43	C12313	C3	C14154	B27	C26917	D27	J11402	C44	R11402	B38	R11705	D38	R12805	B7	R14102	B18	R14508	E20	SW3420I	B45
C11455	C43	C12314	C28	C14155	B28	CF12201	A3	J11402	C44	R11403	B37	R11706	E38	R12806	C8	R14103	B19	R14509	E21	SW3421I	B45
C11456	C43	C12601	B32	C14158	B24	CF12301	C4	J11403	D30	R11404	B38	R11707	E39	R12807	C8	R14104	B19	R14520	D5	SW3430I	B45
C11501	D40	C12602	B32	C14159	B23	CF12351	B4	J13201	B51	R11405	C29	R11708	D37	R12808	C8	R14105	C20	R14701	D19	SW3431I	B45
C11502	D40	C12701	A7	C14160	B27	CR11401	B29	K14201	A18	R11406	B29	R11709	E37	R13101	A7	R14106	B19	R14702	D20	T14101	A21
C11503	D43	C12702	C10	C14201	A17	CR11402	E32	K14201	B18	R11407	C44	R11909	C43	R13102	A8	R14107	B19	R14703	A16	T14201	A17
C11504	D43	C12703	C10	C14203	A19	CR11403	D32	L12301	C4	R11408	C44	R11910	A42	R13103	A8	R14108	C20	R14704	E3	T14301	E7
C11506	D38	C12704	C9	C14204	A19	CR11501	D41	L12302	B3	R11409	C44	R11911	A42	R13108	A7	R14109	C19	R14705	E3	T14401	D11
C11507	E38	C12706	D4	C14205	A20	CR11502	D41	L12303	B4	R11410	D44	R11912	B42	R13109	D46	R14110	C19	R14706	D3	T14401	E18
C11601	A5	C12707	C28	C14206	A20	CR11503	D43	L12305	C27	R11411	E31	R11913	B42	R13110	D45	R14111	C19	R14851	D4	U11501	D37
C11602	C38	C12708	C28	C14206	A20	CR11504	D23	L12352	B4	R11412	E31	R11915	B41	R13111	D46	R14112	C19	R14901	E3	U11501	D41
C11603	C38	C12709	B8	C14207	C17	CR11505	D24	L12705	C27	R11413	D31	R11917	C41	R13112	D46	R14113	C20	R14902	E2	U11501	D42
C11604	C40	C12710	B9	C14208	A17	CR11601	B41	L14101	B28	R11414	D31	R11918	C41	R13113	C46	R14114	D20	R14903	E2	U11501	E37
C11605	D40	C12711	B11	C14209	A18	CR11602	C37	L14102	B22	R11460	B38	R11919	C41	R13118	B47	R14115	D20	R14904	D3	U11601	A39
C11606	C40	C12712	A28	C14210	A18	CR11603	C37	L14103	A24	R11461	B38	R11920	A44	R13119	B47	R14116	D20	R14906	E3	U11602	A41
C11607	C40	C12713	C10	C14211	B18	CR12301	B5	L14105	A23	R11462	C43	R11921	B44	R13121	D46	R14117	A20	R14909	D3	U11602	B41
C11608	B38	C12714	C13	C14212	C17	CR12702	E4	L14200	A18	R11463	C43	R12201	A3	R13122	A46	R14118	A24	R14910	D2	U11900	A43
C11609	B38	C12715	B13	C14213	C17	CR13501	D46	L14401	E7	R11501	D40	R12302	B2	R13123	D46	R14119	A23	R15101	A15	U11901	B43
C11610	C38	C12716	B13	C14302	E5	CR14101	B18	L14402	D9	R11502	D40	R12303	B1	R13124	C45	R14120	D23	R15102	C15	U12101	A4
C11611	B38	C12717	C9	C14303	E5	CR14102	B18	L15101	D21	R11503	D40	R12304	B4	R13125	C45	R14121	E52	R15103	B15	U12101	B2
C11612	D38	C12718	C10	C14304	E6	CR14103	C19	L26901	C26	R11504	D40	R12305	D45	R13126	B47	R14122	A25	R15104	A15	U12101	B7
C11613	D38	C12801	C8	C14305	E6	CR14104	C19	PW14201	A17	R11505	D41	R12306	E24	R13128	B51	R14123	A25	R15105	C15	U12101	D2
C11614	C38	C12802	B7	C14306	E6	CR14105	C18	Q11501	D23	R11506	D40	R12307	C5	R13130	C50	R14124	B22	R15106	B15	U13102	A52
C11615	C38	C12803	C9	C14309	E5	CR14106	A22	Q11603	C38	R11507	D41	R12308	A5	R13131	B50	R14126	D20	R15107	A14	U14101	C19
C11616	C37	C12805	B6	C14310	E5	CR14107	B23	Q11901	C41	R11508	D42	R12309	B4	R13134	A51	R14127	D21	R15108	C14	U14102	D19
C11617	A38	C12806	C8	C14320	D2	CR14108	B21	Q12301	B5	R11509	D42	R12310	B3	R13135	A51	R14128	D22	R15109	B14	U14103	C23
C11618	D38	C12807	C8	C14321	D2	CR14109	B21	Q12701	C13	R11510	D42	R12311	B4	R13136	B51	R14129	C20	R15118	D16	U14104	A26
C11619	E38	C13102	A7	C14322	E4	CR14110	B23	Q12702	A13	R11511	D38	R12314	C2	R13139	A52	R14130	D23	R17130	C1	U14150	C27
C11620	C40	C13114	D46	C14401	E7	CR14111	D21	Q12703	B13	R11512	E38	R12315	C2	R13142	A51	R14132	D22	R17402	B51	U14501	D7
C11621	B40	C13119	B52	C14402	E8	CR14113	E24	Q12704	B13	R11513	D23	R12316	C3	R13143	C50	R14135	D20	R17403	C51	U26901	C34
C11622	B40	C13141	C46	C14403	D9	CR14114	E24	Q13101	A8	R11514	D23	R12317	B3	R13144	D50	R14151	C26	R17409	C51	U26902	A34
C11623	D40	C13163	C24	C14404	D9	CR14115	C27	Q13103	D46	R11601	A5	R12318	C4	R13165	E51	R14153	B23	R17411	C51	U26903	A31
C11624	A5	C13205	B50	C14405	D10	CR14117	C19	Q13104	B51	R11602	D39	R12351	B4	R13166	B51	R14155	B27	R26901	D27	V101	C16
C11625	D40	C13501	D46	C14406	E8	CR14201	A19	Q13105	B51	R11603	C39	R12601	B32	R13169	C50	R14157	B27	R26902	D31	Y12801	B9
C11626	A39	C13502	D46	C14502	D6	CR14202	A19	Q13301	E46	R11604	C39	R12701	C10	R13176	B51	R14158	B27	R26903	E33	Y14101	D2
C11627	A39	C13503	C45	C14504	D8	CR14203	A19	Q13302	E46	R11605	B38	R12702	E4	R13180	B51	R14159	B27	R26904	E32		
C11628	A41	C13504	C45	C14505	D7	CR14204	A19	Q13501	D46	R11606	D38	R12703	C10	R13181	B50	R14201	A17	R26905	D31		
C11629	B39	C14101	B19	C14506	E21	CR14205	B18	Q13503	C46	R11607	D38	R12704	A7	R13182	B50	R14202	A18	R26906	D32		
C11630	A41	C14102	B20	C14507	E21	CR14210	A19	Q14101	B20	R11608	D38	R12705	C9	R13183	D43	R14204	A20	R26907	D32		
C11631	A41	C14103	C19	C14521	D5	CR14301	E5	Q14102	B19	R11609	D38	R12706	C12	R13185	D44	R14205	A17	R26908	D33		
C11632	A38	C14104	C19	C14701	E20	CR14401	D10	Q14103	C19	R11611	A40	R12707	A12	R13188	C46	R14206	B17	R26910	D32		
C11633	A38	C14105	C19	C14702	D19	CR14501	D7	Q14104	A25	R11612	A40	R12708	B12	R13189	B46	R14303	D1	R26910A	D27		
C11701	E37	C14106	C20	C14703	D19	CR14701	E19	Q14105	A25	R11613	B40	R12710	B2	R13190	B46	R14304	E5	R26911	D33		
C11702	D38	C14107	C20	C14704	D19	CR14702	D19	Q14106	D21	R11614	A41	R12711	B2	R13191	B46	R14305	E6	R26912	B33		
C11703	D38	C14108	A20	C14706	E20	CR14704	E20	Q14107	D21	R11615	C38	R12712	B12	R13192	D51	R14306	E6	R26913	B33		
C11704	E38	C14109	A22	C14710	E3	CR14901	E3	Q14108	B19	R11616	C38	R12713	B12	R13198	E51	R14309	E5	R26915	B30		
C11705	E38	C14110	A24	C14711	E21	CR14902	E3	Q14115	B27	R11617	B38	R12714	B10	R13203	B50	R14310	E4	R26916	D35		
C11906	A42	C14111	B23	C14901	E3	CR26901	D27	Q14201	B17	R11618	A5	R12715	C13	R13314	E46	R14318	E1	R26917	D36		
C11907	B42	C14112	B23	C14902	E2	CR26902	D27	Q14301	E6	R11619	C37	R12716	C13	R13315	E45	R14319	E1	R26921	B30		
C11908	C43	C14113	B21	C14903	D3	DY1	D9	Q14302	E5	R11620	C37	R12717	C13	R13316	E46	R14320	D2	R26922	B30		
C11909	B43	C14114	B24	C14904	D3	F14201	A17	Q14401	E7	R11621	B40	R12718	C13	R13317	E46	R14321	D4	R26923	B29		
C11910	A42	C14115	C21	C15101	D15	FB13201	B50	Q14901	D3	R11622	B40	R12719	A13	R13318	E46	R14322	E4	R26924	B30		
C11912	B42	C14116	D23	C17416	C51	FB14106	B22	Q15101	A14	R11623	B41	R12720	A13	R13319	E45	R14323	D4	R26925	B29		
C11913	A44	C14118	A28	C17417	C51	FB14107	A22	Q15102	C14	R11624	B41	R12721	A13	R13320	E45	R14324	D1	R26926	C30		
C11914	B44	C14119	B24	C26901	D28	FB14108	A22	Q15103	B14	R11625	A41	R12722	A13	R13321	E46	R14326	D1	R26927	B30		
C12301	C1	C14121	B24	C26902	D27	FB14109	B20	Q26901	D35	R11626	A41	R12723	B13	R13322	E46	R14327	D1	R26928	C30		
C12302	B1	C14122	A24	C26905	C32	FB14110	A24	Q26902	D31	R11627	C38	R12724	B13	R13501	D45	R14328	D4	R26929	C31		
C12303	D45	C14124	A22	C26905A	D27	FB14114	B21	Q26903	B29	R11628	A38	R12725	B13	R13503	D46	R14401	D10	R26930	C31		

RCA

MODEL G27648YX1 (CHASSIS CTC203AA)

MAIN BOARD

A SAMS Technical Publishing GridTrace™ PHOTO

MAIN BOARD, GRIDTRACE LOCATION GUIDE

BC14901	O7
C11450	O3
C11451	O3
C11453*	O3
C11454*	O3
C11455*	O3
C11456*	N3
C11501*	K2
C11502*	K2
C11503*	K1
C11504	K1
C11506	K1
C11507	J2
C11601	N2
C11602	N2
C11603	N2
C11604	M3
C11605*	M3
C11606*	M3
C11607*	M3
C11608*	M2
C11609*	M2
C11610*	M2
C11611	M2
C11612*	M1
C11613*	M2
C11614	N2
C11615*	N2
C11616	N2
C11617	N3
C11618	M2
C11619	N3
C11620	M3
C11621*	L2
C11622*	L2
C11623	M3
C11624	N1
C11625*	L2
C11626*	L2
C11627*	M2
C11628	L1
C11629*	L2
C11630	K2
C11631*	L1
C11701*	J2
C11702*	K2
C11703	K2
C11704*	J3
C11705	J2
C11906*	I2
C11907*	H2
C11908	I2
C11909	H2
C11910*	H2
C11912*	G2
C11913	I1
C11914	G1
C12301*	J5
C12302*	J5
C12303*	J4
C12304*	K5
C12305	K5
C12306	N6
C12307*	J5
C12308*	J5
C12310	K5
C12312*	K5
C12313*	J5
C12314	K6
C12701	I4
C12702	I4
C12703	H5
C12704	H3
C12706	F6
C12707	H5
C12708*	H5
C12709*	I4
C12710*	I4
C12711*	I4
C12712*	G3
C12713	H4
C12714*	G4
C12715*	G4
C12716*	H4
C12717*	J5
C12718*	I5
C12801*	I5
C12802*	J4
C12803*	J5
C12805*	J4
C12806	J6
C12807*	J5
C13102*	E1
C13114*	D2
C13119*	E3
C13141*	C4
C13163*	F5
C13205*	O1
C13501*	B4
C13502*	B3
C13503*	B3
C13504*	B4
C14101	K11
C14102	H10
C14103*	K11
C14104	J12
C14105	J12
C14106*	H11
C14107*	F12
C14108	I11
C14109	F10
C14110	E10
C14111	D12
C14112	D11
C14113	F11
C14114	F11
C14115	F11
C14116	E11
C14118	E9
C14119	F5
C14121	F12
C14122	H9
C14124	F10
C14125	I11
C14126*	I12
C14127*	I12
C14150	H5
C14151	H5
C14152	H6
C14153*	I5
C14154*	F6
C14155	O5
C14158	L6
C14159*	L6
C14160*	M6
C14201	M12
C14203	O10
C14204	O11
C14205	L10
C14206	M10
C14207	O11
C14208	N12
C14302*	G8
C14303*	G8
C14304	H8
C14305	H8
C14306	H8
C14309*	G8
C14310	G8
C14320	I6
C14321*	I5
C14322*	I6
C14401*	J8
C14402	K8
C14403	F8
C14404	F7
C14405	F9
C14406	J8
C14502	B7
C14504	B6
C14505	C7
C14506	C7
C14507*	C7
C14521	H5
C14701	M7
C14702*	M8
C14703	E9
C14704	E8
C14706*	M8
C14710	N10
C14711	L8
C14901	E8
C14902	E8
C14903*	I5
C14904*	K6
C17416*	L4
C17417*	L4
CF12201	J4
CF12351	J4
CR11501*	J1
CR11502*	K1
CR11503	K1
CR11504	G2
CR11505*	J2
CR11601*	L1
CR11602	N2
CR11603*	O2
CR12301*	K5
CR12702	G6
CR13501	B3
CR14101	K10
CR14102	K11
CR14103	H12
CR14104	H12
CR14105	J11
CR14106	F10
CR14107	D12
CR14108	F10
CR14109	F11
CR14110	D5
CR14111	E11
CR14113*	P3
CR14114*	P3
CR14115	F6
CR14117	I12
CR14201	O10
CR14202	O11
CR14203	N10
CR14204	N11
CR14205	D11
CR14301	G8
CR14401	F8
CR14501	C7
CR14701	M8
CR14702	F8
CR14704	M8
CR14901	E7
CR14902	J7
F14201	L11
FB13201	O1
FB14106	F10
FB14107	F10
FB14108	F10
FB14109	I11
FB14110	L5
FB14114	F10
FB14401	J8
FB14501	I6
J11403	L9
J11450	N3
J11901	H1
J13103	E3
J13104	C3
J13201	O1
J13202	C1
J14405	M9
K14201	K11
L12301*	J4
L12302	K4
L12303	K5
L12352	J6
L12705	H5
L14101	M6
L14102	D6
L14103	G9
L14105	D11
L14401	I8
L14402	F9
P12701	G3
P14401	D8
P14501	D6
Q11501*	G2
Q11603	O2
Q11901*	J1
Q12301*	J4
Q12701*	H4
Q12702*	G4
Q12703*	H4
Q12704*	G4
Q13101*	E2
Q13103*	D2
Q13104*	D2
Q13105*	D2
Q13301*	D4
Q13302*	D4
Q13501*	B3
Q13503*	B4
Q14101	J11
Q14102	J11
Q14103	J11
Q14104	D10
Q14105*	D10
Q14106*	E12
Q14107*	D11
Q14108*	K11
Q14115	E6
Q14201*	D7
Q14301	H9
Q14302*	G8
Q14401	J8
Q14901	K7
R11460*	O3
R11461*	O3
R11462*	O3
R11463*	O3
R11501*	K3
R11502*	K3
R11503*	K1
R11504*	K3
R11505*	K1
R11506*	K3
R11507*	K1
R11508*	K1
R11509*	K1
R11510*	K1
R11511	J1
R11512	J2
R11513*	G2
R11514*	G2
R11601*	N2
R11602*	M3
R11603*	M3
R11604*	M3
R11605*	M2
R11606*	M2
R11607*	M2
R11608*	M1
R11609*	M2
R11611*	M1
R11612*	L2
R11613*	L1
R11614*	L2
R11615*	N2
R11616*	N2
R11617*	M2
R11618*	N2
R11619*	O2
R11620*	O2
R11621*	M1
R11622*	L1
R11623*	L1
R11624*	L1
R11625*	L1
R11626*	K2
R11627	F2
R11701*	K2
R11702*	K2
R11703*	K2
R11704*	K2
R11705	K2
R11706*	J3
R11707	K2
R11708*	K2
R11709*	K2
R11909	G2
R11910*	I2
R11911*	I2
R11912*	H2
R11913*	H2
R11915*	J1
R11917	F2
R11918*	J1
R11919*	J1
R11920*	I1
R11921*	G1
R12201*	J4
R12302*	J6
R12303*	J5
R12304*	J4
R12305*	J4
R12306*	J5
R12307*	J3
R12308*	K5
R12309*	K5
R12311*	J4
R12314*	K5
R12315*	K5
R12316*	J5
R12317*	K4
R12318*	K4
R12351*	K4
R12701*	I4
R12702	G5
R12703*	I4
R12704	I3
R12705*	J5
R12706*	I4
R12707*	I4
R12708*	I4
R12710	K4
R12711	K4
R12712*	G4
R12713*	G4
R12714*	I4
R12715*	H4
R12716*	G4
R12717	G4
R12718*	G3
R12719*	G4
R12720*	G4
R12721	G4
R12722*	H3
R12723*	I4
R12724*	I4
R12725	G4
R12726*	H4
R12727*	G3
R12731	H4
R12801*	I5
R12802*	I5
R12803*	J6
R12804*	I4
R12805*	J4
R12806*	J6
R12807*	J6
R12808*	J6
R13101	D1
R13102	D2
R13103	D2
R13108	F3
R13109*	E2
R13110*	C2
R13111*	E2
R13112*	D2
R13113*	B2
R13118	C2
R13119	C2
R13121*	D4
R13122*	E4
R13123	D4
R13124*	C4
R13125	D4
R13126*	C2
R13128*	D2
R13130*	B2
R13131*	B2
R13134*	E2
R13135*	D2
R13136*	E3
R13139*	E2
R13142*	E2
R13143	C4
R13144	C4
R13165*	D2
R13166*	B2
R13169*	B2
R13176*	E3
R13180*	D2
R13181*	D2
R13182*	D2
R13183*	D4
R13185*	E4
R13188	B2
R13189	B2
R13190	B2
R13191	B2
R13192*	C4
R13198*	D3
R13203	O1
R13314*	E4
R13315*	D4
R13316*	E4
R13317*	E4
R13318*	E4
R13319*	D5
R13320	D5
R13321*	F5
R13322	F4
R13501*	B4
R13503*	B4
R13504*	B3
R13505*	B3
R13508*	B3
R13510*	C4
R13511*	B3
R13512*	B3
R14101	J10
R14102	J10
R14103	K10
R14104	K11
R14105	H11
R14106	K11
R14107	J11
R14108	J11
R14109	J11
R14110	I11
R14111	I12
R14112*	H11
R14113	F11
R14114*	E12
R14115	E11
R14116	E12
R14117	I10
R14118	E11
R14119	D12
R14120	D9
R14121	E9
R14122	D10
R14123	D10
R14124	D9
R14126*	E12
R14127*	D10
R14128	E9
R14129*	H1
R14130	F12
R14132*	D11
R14151	G5
R14153	E6
R14155	E6
R14157	E6
R14158	F6
R14159	F6
R14201	N12
R14202	O11
R14204	M10
R14205	N12
R14206*	D7
R14303	H6
R14304*	G8
R14305	I8
R14306	H8
R14309	G8
R14310	H7
R14318	D6
R14319	D6
R14320*	I6
R14321*	G6
R14322*	I6
R14323*	I6
R14324*	H6
R14326*	I6
R14327*	H6
R14401	G8
R14402	I7
R14403	G9
R14501	C6
R14503	B6
R14504	D7
R14506	D6
R14507	B6
R14508	D6
R14509	D7
R14520*	I5
R14701	N7
R14702	E9
R14703	E7
R14704	O9
R14705	L9
R14706	G5
R14851*	I5
R14901	E7
R14902	K7
R14903	N7
R14904	G6
R14906*	J6
R14909*	I6
R14910*	N3
R17130*	O6
R17402*	L4
R17403*	L4
R17409*	M4
R17411*	M4
RN14501	C7
RT14201	L11
SF12301	J6
T14101	G11
T14201	M11
T14301	H8
T14401	N9
TU17101	N4
U11501	J2
U11601	L2
U11602*	L1
U11900	I2
U11901	H2
U12101	J5
U13102	E3
U14101	H12
U14102	E12
U14103	E5
U14104	C8
U14150	G5
U14501	C7
Y12801	I6
Y14101	I6

* Component located on bottom of board.

PARTS LIST

Item No.	Type No.	Mfr. Part No.	NTE Part No.
CR11401	-	232710	-
CR11402	-	220638	NTE5014A
CR11403	-	232710	-
CR11501, 02	-	232709	-
CR11503	-	215488	NTE136A
CR11504	-	226463	-
CR11505	-	232709	-
CR11601	-	232709	-
# **CR11602**	-	159429	NTE5019T1
CR11603	-	232709	-
CR12301	-	227051	-
CR12702	-	198589	NTE519
CR13501	-	164874	NTE177
CR14101	-	232221	-
CR14102	-	198589	NTE519
CR14103, 04	-	139706	NTE177
CR14105	-	198589	NTE519
CR14106	-	243636	-
CR14107	-	217306	-
CR14108	-	243636	-
CR14109	-	176296	NTE552
CR14110	-	155276	NTE116
CR14111	-	198589	NTE519
CR14113, 14	-	232709	-
CR14115	-	215488	NTE136A
# **CR14117**	-	244224	-
CR14201 Thru			
CR14204	-	147015	NTE125
CR14205	-	198589	NTE519
# **CR14210**	-	214649	NTE5331
CR14301	-	176296	NTE552
# **CR14401**	-	140971	NTE558
CR14501	-	155276	NTE116
CR14701	-	241304	-
CR14702	-	176296	NTE552
CR14704	-	207878	NTE519
# **CR14901**	-	157301	NTE177
# **CR14902**	-	159429	NTE5019T1
CR26901	-	198602	-
CR26902	-	-	-
Q11501	-	215495	-
Q11603	-	177788	NTE31
Q11901	-	215495	-
Q12301	-	215496	-
Q12701, 02, 03	-	215495	-
Q12704	-	215496	-
Q13101, 03, 04	-	215496	-
Q13105	-	215495	-
Q13301	-	215496	-
Q13302	-	215495	-
Q13501	-	215496	-
Q13503	-	215495	-
Q14101	-	244223	-
# **Q14102**	-	147665	NTE159
Q14103	-	232218	-
Q14104	-	243955	-
Q14105, 06, 07	-	215495	-
# **Q14108**	-	215496	-

Item No.	Type No.	Mfr. Part No.	NTE Part No.
Q14115	-	177788	NTE31
Q14201	-	219412	-
Q14301	-	146851	NTE287
Q14302	-	215495	-
# **Q14401**	-	242224	-
# **Q14901**	-	147665	NTE159
Q15101, 02, 03	-	215497	NTE2501
Q26901	-	215496	-
Q26902 Thru			
Q26905	-	215495	-
U11501	MC3403N	241785	NTE987
U11601	CXA2074S	237930	-
U11602	-	237474	-
U11900, 01	TDA7267	244225	-
# **U12101**	LA7612N	252842	-
	LA7612A	241266	-
U13102 (1)	-	251160	-
U13102 (2)	-	251271	-
# **U14101**	-	223653	-
U14102	-	231525	-
U14103	L7852CV	241752	-
U14104	KA7812	162394	NTE966
U14150	L78S75CV	231526	-
U14501 (1)	-	232109	NTE1788
U14501 (2)	-	215531	NTE1788
U26901, 02, 03	LA7221	227354	-

Item No.	Function/Rating	Mfr. Part No.	Notes
C11612, 13	22pF 5% 50V NPO	194903	-
C12303	120pF 5% 50V NPO	194902	-
C12714, 15, 16	470pF 5% 50V NPO	214732	-
C12718	100pF 5% 50V NPO	193340	-
C12803	15pF 5% 50V NPO	200538	-
C12805	120pF 5% 50V NPO	194902	-
C13102	120pF 5% 50V NPO	194902	-
	120pF 5% 50V NPO	174414	-
C13205	220pF 5% 50V NPO	205551	-
	220pF 5% 50V NPO	178188	-
# **C14102**	.0168 1.6kV	237355	-
# **C14108**	.0011 1.6kV	244208	-
# **C14111**	100µF 20% 63V	237425	-
# **C14112**	.01 10% 50V	240934	-
C14113, 15	680pF 20% 1kV	190538	-
C14159, 60	100pF 5% 50V NPO	193340	-
# **C14201**	.22 20% 250VAC	-	-
	.22 20% 125VAC	231451	-
# **C14203, 04**	680pF 20% 1kV	190538	-
# **C14205**	680µF 20% 200V	190560	-
# **C14207**	.0034 20% 120V	223330	-
# **C14208**	470pF 250VAC	250102	-
# **C14209**	.1 20% 125V	229322	-
# **C14210, 11**	680pF 20% 1kV	190538	-
# **C14212, 13**	.01 20% 250VAC	252973	-
C14303	470pF 5% 50V NPO	214732	-
C14310	15pF 1% 250V NPO	223899	-
C14322	39pF 5% 50V NPO	202905	-
C14401	470pF 5% 50V NPO	214732	-
	470pF 5% 50V NPO	195918	-

PARTS LIST continued

Item No.	Function/Rating	Mfr. Part No.	Notes
# **C14402**	.0127 1.6kV	246497	-
# **C14403**	.41 5% 250V	214752	-
# **C14404**	2.2µF 20% 200V	247673	-
# **C14405**	.0047 10% 250V	142765	-
# **C14406**	470pF 5% 2kV	227068	-
C14702	470pF 10% 500V NPO	227050	-
C14704	680pF 20% 1kV	190538	-
C14706	470pF 10% 500V NPO	227050	-
C14710	.01 20% 1kV	137583	-
# **C14904**	.22 25V	217298	-
C15101	.001 10% 3kV	120696	-
C17416, 17	43pF 5% 50V NPO	214029	-
CF12201	Filter	195702	4.5MHz
CF12301	Trap	195702	4.5MHz
CF12351	Trap	181125	4.5MHz
# **DY1** (3)	Yoke	-	Horiz 1.3mH, Vert 18mH
# **F14201**	Fuse	175425	5A, 125V
FB13201	Ferrite Bead	226467	-
FB14106, 07, 08	Ferrite Bead	237504	-
FB14109, 10	Ferrite Bead	226467	-
FB14114	Ferrite Bead	237504	-
FB14401	Ferrite Bead	161237	-
FB14501	Ferrite Bead	215547	-
FL12601	Filter	225701	Comb
IR3401I	Receiver	229219	IR
J11401	Jack	239389	Assembly
J11402	Jack	245283	Assembly
J11403	Socket	195705	S-Video Input
J13201	Socket	214609	Gemstar IR Output
# **K14201** (1)	Relay	256573	Degaussing
# **K14201** (2)	Relay	190490	Degaussing
# **KS15101**	Socket	233120	CRT
L12301	18µH	243894	-
L12302	VCO	215502	-
L12303	FM	233056	-
L12305	10µH	175409	-
L12352	18µH	195711	-
L12705	10µH	175409	-
L14101	100µH	160186	-
L14102	27µH	190017	-
L14103	22µH	215504	-
L14105	47µH	244222	-
# **L14200**	Degaussing	218764	-
L14401	6.8µH	191141	-
# **L14402**	Horizontal Linearity	192844	-
L15101	100µH	160186	-
# **L26901**	-	244249	-
# **PW14201**	Line Cord	241251	AC, Polarized
# **R11401, 03**	2200 5% 1/2W	246613	-
# **R11406**	56	247610	-
# **R11407, 09**	2200 20% 1/4W	237429	-
# **R11412, 14**	56	247610	-
# **R11511, 12**	100 5% 1/4W	198667	-
R11616	61.9K 1% 1/10W	225705	-
# **R11627**	10 5% 1/4W	241259	-
# **R11909**	16 5% 3W Nonflammable	244213	-
R12201	680 2% 1/10W	195939	-
R12302, 03	120K 2% 1/10W	207834	-
R12310	1800 2% 1/10W	197903	-
R12311	620 2% 1/10W	205339	-
R12317	240 2% 1/10W	197624	-
R12318	1800 2% 1/10W	197903	-
R12351	270 2% 1/10W	197623	-
# **R12601**	150 5% 1/4W	176645	-
R12713	620 2% 1/10W	205339	-
	750 2% 1/10W	202914	-
R12717, 21, 25	220 2% 1/4W	175324	-
R12801	15K 2% 1/10W	205354	-
R12802	120K 2% 1/10W	207834	-
R12804	13K 2% 1/10W	205353	-
	13K 2% 1/8W	178285	-
R12805	750 2% 1/10W	202914	-
R13111	27K 2% 1/10W	205245	-
R13503	64.9K 1% 1/10W	247691	-
R13504	100K 1% 1/10W	215221	-
# **R14101**	47K 5% 3W	232213	-
# **R14102**	6800 5% 1/2W	179248	-
# **R14105**	68 5% 1/4W	175039	-
# **R14106**	2000 5% 1/4W	175321	-
# **R14107**	43 5% 1/4W	244214	-
# **R14108**	.1 5% 3W	244215	-
# **R14109**	750 5% 1/4W	179317	-
R14112	680 2% 1/10W	195939	-
R14114	270K 2% 1/10W	205375	-
R14115	140K .1% 1/4W	249013	-
R14116	2800 .1% 1/4W	244217	-
# **R14117**	160 5% 7W	227958	-
R14118	33K 5% 3W	243805	-
# **R14124**	3.3 5% 2W	223680	-
R14126	37.4K 1% 1/10W	215215	-
R14128	100K 5% 1/4W	175044	-
	100K 2% 1/8W	176816	-
R14135	3010 1% 1/4W	248594	-
# **R14151**	8.2 5% 1W	235378	-
# **R14201**	2.7M 10% 1/2W	217662	-
# **R14202**	1.8 10% 15W	200444	-
# **R14205**	120K 20% 1/2W	238903	-
# **R14305**	2400 5% 3W	235380	-
R14326	910 2% 1/10W	197627	-
# **R14401**	15K 5% 1W	190557	-
# **R14402**	91 5% 1/2W	227249	-
# **R14403**	820 5% 1W	175349	-
# **R14506**	13 5% 1W	231508	-
# **R14507**	1.5 5% 2W	237441	-
# **R14508**	1 5% 2W	215577	-
# **R14701**	10 20% 1/2W	241261	-
# **R14703**	.68 5% 3W	244221	-
# **R14704**	82K 10% 1/2W	239116	-
# **R14705**	27K 10% 1/2W	238958	-
R14706	1050 1% 1/4W	231511	-
# **R14901**	100 5% 1/4W	198667	-
# **R14902**	39.2K 1% 1/4W	190469	-
# **R14903**	40.2K 1% 1/4W	219026	-
R14909	15K 2% 1/10W	205354	-
# **R15101, 02, 03**	10K 5% 2W	176656	-
# **R15104, 05, 06, 18**	2200 5% 1/2W	247669	-

PARTS LIST continued

Item No.	Function/Rating	Mfr. Part No.	Notes
# **R26901**	270 5% 1/2W	192410	-
RN14501	Resistor Network	215499	-
# **RT14201**	8 Cold PTC	207768	-
SF12301	Filter	217318	SAW
# **SP1, 2**	Speaker	243873	60 X 125 MM, 8 Ohms
SW3410I	Switch	207842	Channel Up
SW3412I	Switch	207842	Power
SW3420I	Switch	207842	Channel Down
SW3421I	Switch	207842	Volume Up
SW3430I	Switch	207842	Menu
SW3431I	Switch	207842	Volume Down
# **T14101**	SMT	244228	-
# **T14201**	Line Filter	190507	-
# **T14301** (1)	Horizontal Drive	252843	-
# **T14301** (2)	Horizontal Drive	215541	-
# **T14401** (3)	Horizontal Output	244229	-
# **TU17101** (1)	Tuner	248782	CTF5800
# **TU17101** (2)	Tuner	249035	CTT5050T
# **V101**	CRT	HA68ADT195	A68ADT19X05
Y12801	Crystal	161235	3.58MHz
Y14101	Resonator	227064	507.5kHz
#	Fuse Holder	176642	For F14201 (2 Used)
#	Module (1)	253023	Gemstar 4
#	Module (2)	249017	Gemstar 4
#	PC Board	249053	Comb Filter
#	PC Board	244468	CRT
#	PC Board	247617	FPA
	PC Board (2)	251838	4.5MHz Adapter
	Transmitter	242524	Remote, CRK76TE1

 # For SAFETY use only equivalent replacement part.
(1) Used in chassis CTC203AA5 and CTC203AA9.
(2) Used in chassis CTC203AA.
(3) Bonded part of CRT.
(4) Screen and focus controls are part of T14401.

Important Parts Information

- The parts listed here are those not usually available from a well-stocked supply cabinet or bin.
- Where items may be replaced with equivalent parts, several alternates are shown from participating vendors.
- On the parts lists, safety items are marked with a # to remind you that only exact replacements are recommended for these items.
- When ordering parts, state the model number, part number, and description.

Obtaining Parts

Many of these parts are available from your local Sams authorized distributor or the manufacturer of the equipment. Call Sams for the name of your nearest distributor:

800-428-7267

Or consult the Sams *Annual Index* for the address of the original equipment manufacturer.

Participating Vendors

Information on test equipment and replacement parts is listed in these pages for the following participating vendors. Consult the Sams *Annual Index* for their current address.

- NTE Electronics, Inc. (NTE)
- Sencore, Inc.